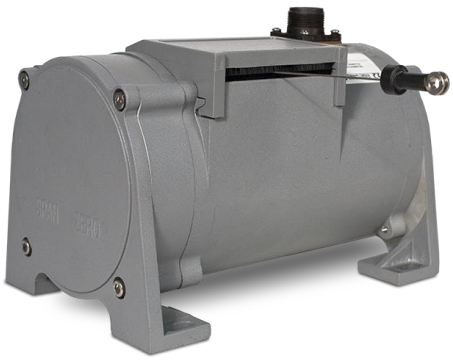

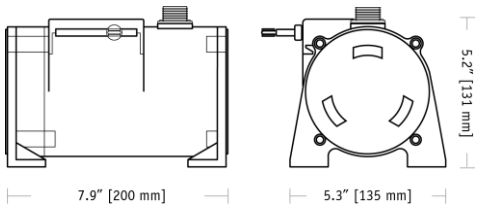

PT9232

Cable Actuated Sensor
Heavy Industrial • RS232 Communication

Linear Position/Velocity to 550 inches (1400 cm)

Aluminum or Stainless Steel Enclosure Options

VLS Option to Prevent Free-Release Damage

IP68 • NEMA 6 Protection

The PT9232 delivers position feedback via RS232 serial communication to your data acquisition or controller system. The PT9232 sends a raw 16-bit count from 0000H to FFFFH. Additionally this device can be set to continuously send data or send data only when polled.

As the internal position sensing element is a precision potentiometer, this transducer maintains current accurate position even during power loss and does not need to be reset to a "home" position.

Output Signal

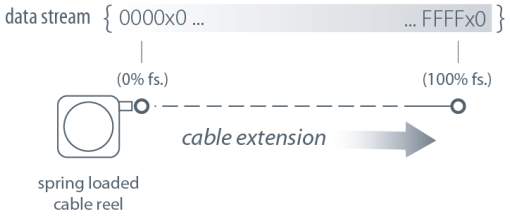

General

Full Stroke Range	0-75 to 0-550 inches
Electrical Interface	RS232
Format	HEX
Accuracy	± 0.10% full stroke
Repeatability	± 0.02% full stroke
Resolution	± 0.003% full stroke
Enclosure Material Options	powder-painted aluminum or 303 stainless steel
Sensor	plastic-hybrid precision potentiometer
Potentiometer Cycle Life	≥ 250,000
Maximum Retraction Acceleration	see ordering information
Maximum Velocity	see ordering information
Weight, Aluminum (Stainless Steel) Enclosure	8 lbs. (16 lbs.) max.

Electrical

Input Voltage	9...22 VDC
Input Current	40 mA
Baud Rate	9600 (selectable to 38.4K)
Update Rate	32 msec

Environmental

Enclosure	NEMA 4/4X/6, IP 67/68
Operating Temperature	-40° to 200°F (-40° to 90°C)
Vibration	up to 10 g to 2000 Hz maximum

I/O Format

Data Format

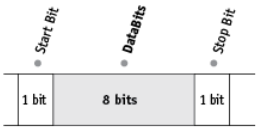

no parity bit

Data Frame

6 byte Hex string:

	STX	CMD	B_0	B_1	B_2	ETX	

STX = 0x02 **CMD** = Command Code* B_0 - B_2 = Data Field* **ETX** = 0x03

**–see below*

Important! All communications to/from the transducer are in **HEX**!

User Commands:

	User Command				Sensor Response			
Description	**<CMD>**	**<B_0>**	**<B_1>**	**<B_2>**	**<CMD>**	**<B_0>**	**<B_1>**	**<B_2>**
Get Sensor Info	0x05	0x00	0x00	0x00	0x05	version(4)	date(5)	date(5)
Get Serial Number	0x15	0x00	0x00	0x00	0x15	serial number(3)		
Start Continuous Data	0x25	0x00	0x00	0x00	0x25	0x00	0x00	0x00
Stop Continuous Data	0x35	0x00	0x00	0x00	0x35	0x00	0x00	0x00
Get Position Data	0x45	0x00	0x00	0x00	0x45	CMC(1)	CMC(1)	status(2)

(1)CMC - Current Measurement Count (Position)

The **C**urrent **M**easurement **C**ount (**CMC**) is the output data that indicates the present position of the measuring cable.

The CMC is a 16-bit value that occupies the first two bytes (B_0 and B_1) of the data field. B_0 is the MSB (most significant byte) and B_1 is the LSB (least significant byte).

The CMC starts at 0000H with the measuring cable fully retracted and continues upward to the end of the stroke range stopping at FFFFH. This holds true for all ranges.

(2)Status

The status byte is used as a flag to indicate the validity of the position signal that the internal electronics receives from the potentiometer.

Flags are as follows:
0x00 = GREEN, 0x55 = YELLOW, 0xAA = RED

A "green" flag shows everything OK. A "yellow" or "red" flag indicates that the sensor has either been extended beyond its range or that there is a problem with the potentiometer.

(3)Serial Number

Each sensor has it's own unique serial number. This information can be retrieved by sending the sensor the "Get Serial Number" command.

The serial number is a 3 byte value from which ranges from 0 to 9999999 (decimal).

(4)Version

This is a single byte value (0-255 decimal) which indicates the currently installed firmware version of the sensor.

(5)Date

This is a 2 byte value showing the date of currently installed firmware. This value ranges from 01011 - 12319 (decimal). Format is MMDDY. While the month and day are expressed as two digit numbers the year is expressed in a single digit only.

Example: 08054 = August 5, 2004

Baud Rate

The baud rate can be set using switches **7** & **8** on the 8-pole DIP switch found on the rs232 controller board located inside the transducer.

DIP-7	DIP-8	baud rate
0	0	9600
1	0	19200
0	1	38400
1	1	9600

RS232 Controller Board and DIP Switch Location

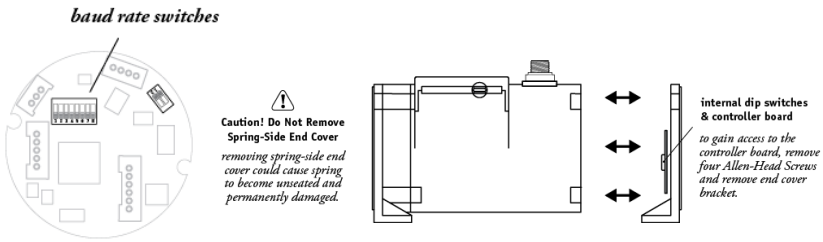

Fig. 1 – Outline Drawing (18 oz. cable tension only)

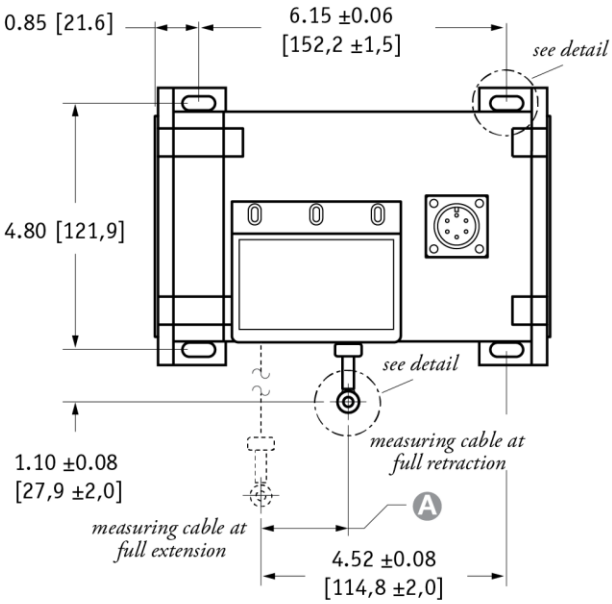

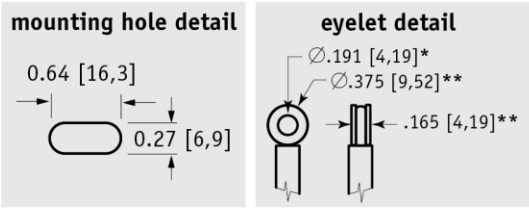

A DIMENSION (INCHES)

RANGE	MEASURING CABLE ∅.031 in.	∅.034 in.	∅.047 in.	∅.062 in.
75	n/a	0.22	0.29	0.37
100	n/a	0.29	0.39	0.49
150	n/a	0.44	0.59	0.73
200	n/a	0.58	0.79	0.98
250	n/a	0.73	0.98	1.22
300	n/a	0.88	1.18	1.47
350	n/a	1.02	1.38	1.71
400	n/a	1.17	1.57	1.96
450	n/a	1.31	1.77	n/a
500	n/a	1.46	1.97	n/a
550	1.61	1.61	n/a	n/a

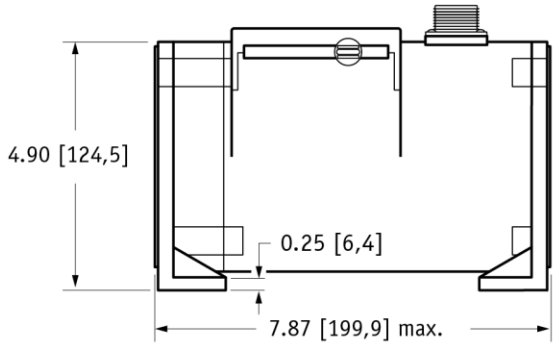

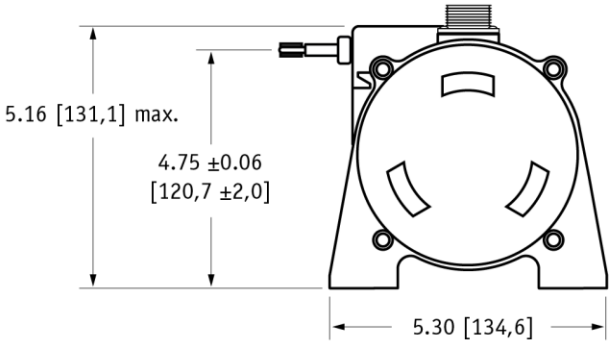

DIMENSIONS ARE IN INCHES [MM]
tolerances are 0.03 IN. [0.5 MM] unless otherwise noted.

* tolerance = +.005 –.001 [+.13 –.03]
** tolerance = +.005 –.005 [+.13 –.13]

Ordering Information

Model Number:

PT9232 - ____ - ____ - ____ - ____ - ____ - ____
order code: R A B C D E

Sample Model Number:

PT9232 - 200 - AL - N34 - 26 - FR - M6

R	range:	200 inches
A	enclosure	aluminum
B	measuring cable:	.034 nylon-coated stainless
C	measuring cable tension:	18 oz.
D	cable exit:	front (horizontal)
E	electrical connection:	6-pin plastic connector

Full Stroke Range:

R order code:	75	100	150	200	250	300	350	400	450*	500*	550*
full stroke range, min:	75 in.	100 in.	150 in.	200 in.	250 in.	300 in.	350 in.	400 in.	450 in.	500 in.	550 in.

** – 36 oz. cable tension strongly recommended*

Enclosure Material:

Ⓐ order code:	AL	SS
	powder-painted aluminum	303 stainless

Measuring Cable:

Ⓑ order code:	N34	S47	S31	V62
cable construction:	Ø.034-inch nylon-coated stainless steel rope	Ø.047-inch bare stainless steel rope	Ø.031-inch bare stainless steel rope	Ø.058-inch PVC jacketed vectra fiber rope
available ranges:	*all ranges*	*all ranges up to 500 inches*	*550 inch range only*	*all ranges up to 400 inches*
general use:	indoor	outdoor, debris, high temperature	outdoor, debris, high temperature	high voltage or magnetic field

Measuring Cable Tension:

Ⓒ order code:	26		52	
tension (30%):	18 oz.		36 oz.	
enclosure material:	*aluminum*	*stainless steel*	*aluminum*	*stainless steel*
max. acceleration:	1 g	1 g	5 g	5 g
max. velocity:	60 inches/sec	60 inches/sec	200 inches/sec	200 inches/sec
	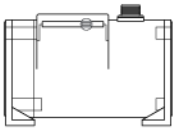 standard housing *see fig 1.*		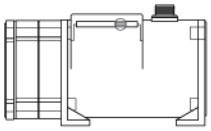 dual-spring housing *see fig 2.*	

Cable Exit:

Ⓓ order code:	FR	UP	BK	DN
	front	top	back	down
	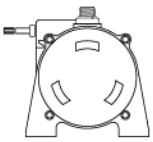	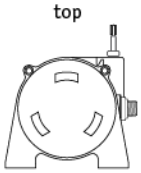	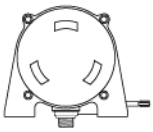	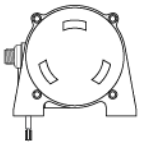

Electrical Connection:

Ⓔ order code:	M6	C25
	6-pin plastic connector with mating plug	25-ft. instrumentation cable 24 AWG, shielded
	IP 67, NEMA 6, NEMA 4X (stainless enclosure only)	**IP 67, NEMA 6**

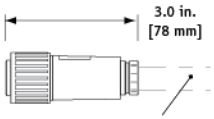

.30 – .39 in. [8 – 10 mm] cable dia.
16 AWG max conductor size
connector: MS3102E-14S-6P
mating plug: MS3106E-14S-6S

25 ft. x 0.2-in. dia.
[7,5 M x 5 mm dia.]
24 AWG, shielded

contact view

pin	signal
A	9...22 VDC
B	common
C	–
D	Transmitted Data
E	Received Data
F	common

color code	signal
Red	9...22 VDC
Black	common
White	–
Green	Transmitted Data
Blue	Received Data
Brown	common

Fig. 2 – Outline Drawing (36 oz. cable tension only)

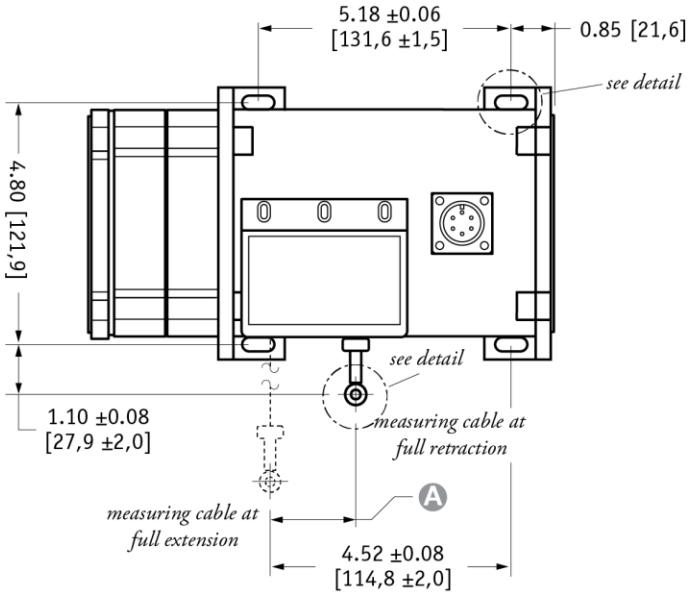

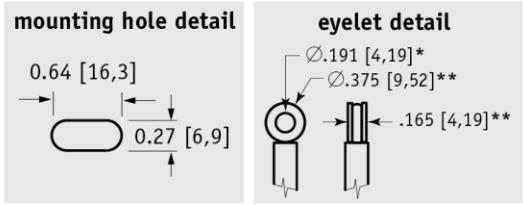

A DIMENSION (INCHES)

	MEASURING CABLE			
RANGE	**∅.031 in.**	**∅.034 in.**	**∅.047 in.**	**∅.062 in.**
75	n/a	0.22	0.29	0.37
100	n/a	0.29	0.39	0.49
150	n/a	0.44	0.59	0.73
200	n/a	0.58	0.79	0.98
250	n/a	0.73	0.98	1.22
300	n/a	0.88	1.18	1.47
350	n/a	1.02	1.38	1.71
400	n/a	1.17	1.57	1.96
450	n/a	1.31	1.77	n/a
500	n/a	1.46	1.97	n/a
550	1.61	1.61	n/a	n/a

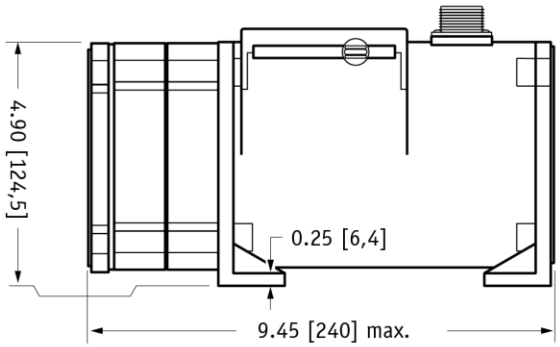

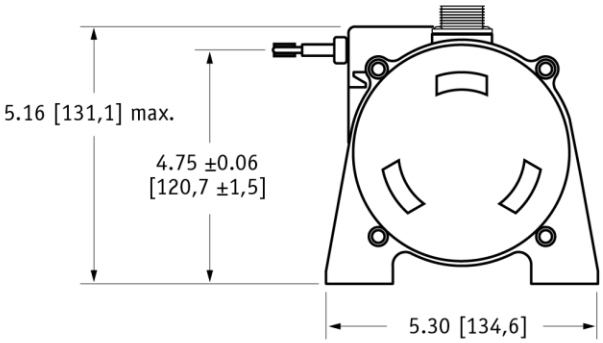

DIMENSIONS ARE IN INCHES [MM]
tolerances are 0.03 IN. [0.5 MM] unless otherwise noted.

* tolerance = +.005 –.001 [+.13 –.03]
** tolerance = +.005 –.005 [+.13 –.13]